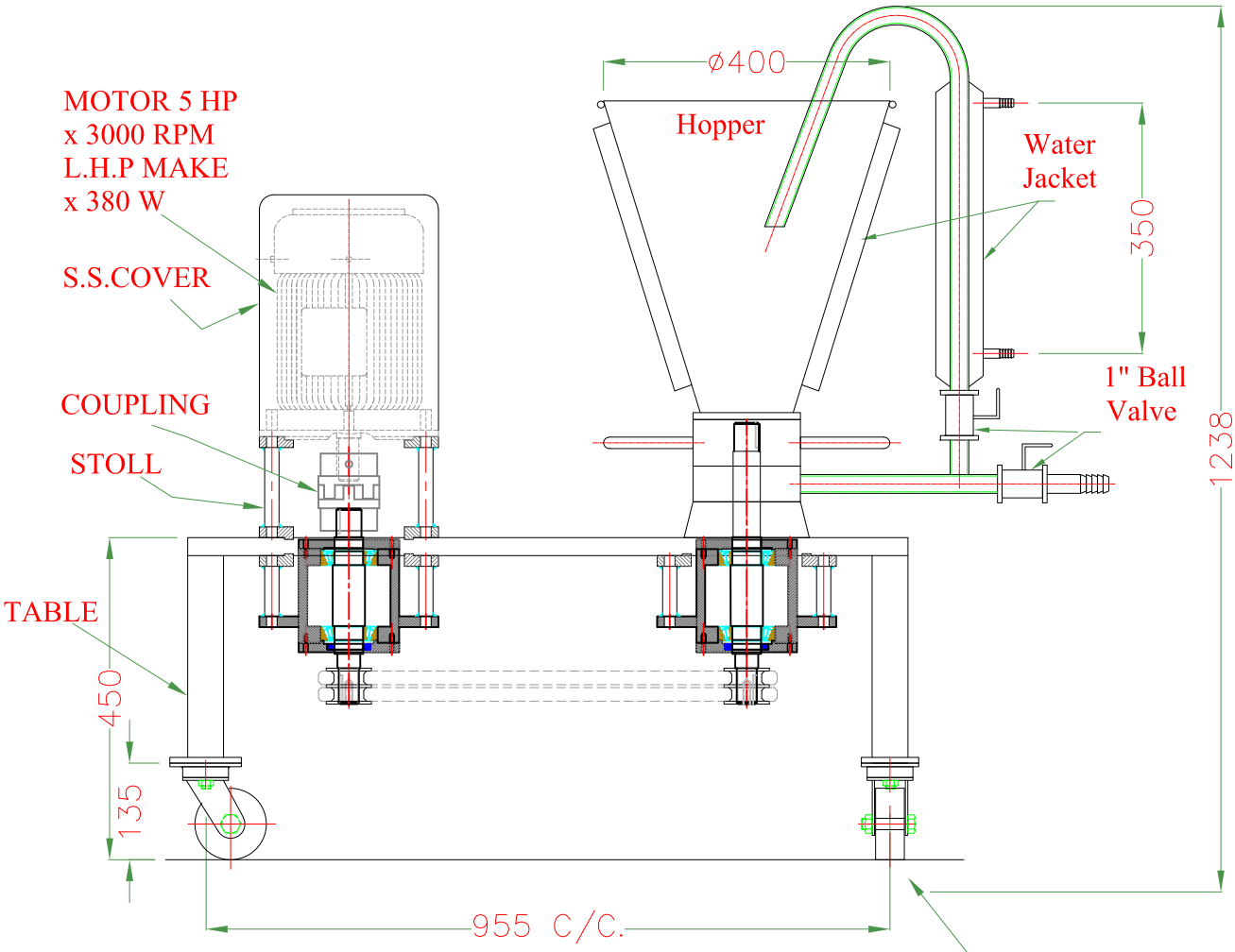
MOTOR 5 HP
x 3000 RPM
L.H.P MAKE
x 380 W
S.S.COVER
COUPLING
STOLL
TABLE
450
135
ø400
Hopper
Water
Jacket
350
1" Ball
Valve
1238
955 C/C.

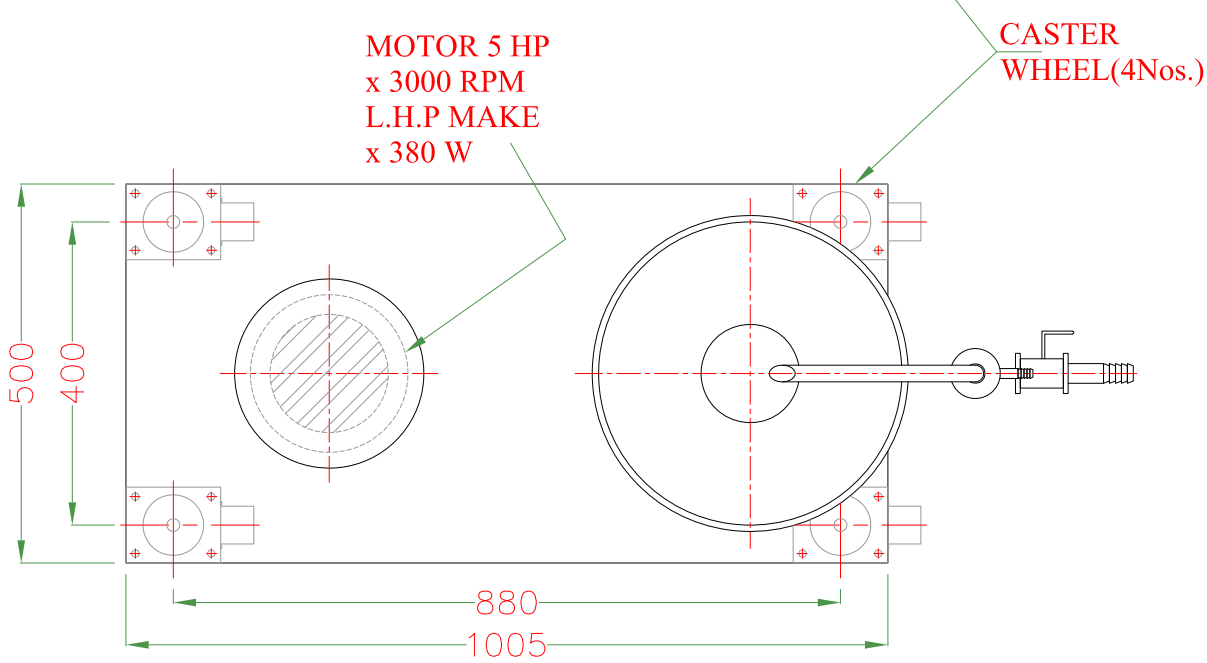
CASTER
WHEEL(4Nos.)
MOTOR 5 HP
x 3000 RPM
L.H.P MAKE
x 380 W
500
400
880
1005